INSTALLATION and OPERATION MANUAL

EELR 343A / EELR 343AEXT

11000 LB.
(SYMMETRICAL)

READ and SAVE THIS INSTRUCTION MANUAL

Snap-On Tools Corporation
1-800-268-7959

MAR. 2003 6-2714

TABLE OF CONTENTS

PAGE

1 SAFETY AND OPERATING INSTRUCTIONS....2

2 SPECIFICATIONS 3

3 CONTENTS 4

4 INSTALLATION REQUIREMENTS 4

5 INSTALLATION INSTRUCTIONS 5

5.1 UNPACKING PROCEDURE 5
5.2 BAY LAYOUT....6
5.3 SAFETY SHUT-OFF BAR INSTALLATION 6
5.4 SAFETY SHUT-OFF BAR ADJUSTMENT 7
5.5 TOWER POSITIONING AND SETUP 8
5.6 ARM INSTALLATION 8
5.7 ARM RESTRAINT INSTALLATION 9
5.8 POWER PACK INSTALLATION....10
5.9 HYDRAULIC SYSTEM INSTALLATION 11
5.10 SAFETY RELEASE CABLE ROUTING AND ADJUSTMENT 13
5.11 HYDRAULIC SYSTEM BLEEDING AND LEVELING PROCEDURE....14
5.12 HYDRAULIC ADJUSTMENT PROCEDURE....16
5.13 TOWER POSITIONING AND ANCHORING....16
5.14 SHIMMING OF THE REMAINING TOWER 18

6 LIFT MAINTENANCE GUIDLINES 19

6.1 SAFETY INSTRUCTIONS....19
6.2 PERIODIC MAINTENANCE....19

7 SAFETY AWARENESS - AUTOMOTIVE LIFT INSTITUTE (ALI) 21

8 PARTS MANUAL 22

8.1 LIFT ASSEMBLY....22
8.2 LIFT ASSEMBLY PARTS LIST 23
8.3 HYDRAULIC SYSTEM 25
8.4 HYDRAULIC SYSTEM PARTS LIST....26
8.5 POWER PACK: #6-1935 (AB-1399) 208-230V/1PH/60Hz....27
8.6 POWER PACK PARTS LIST: #6-1935 (AB-1399) 208-230V/1PH/60Hz....28

1 SAFETY AND OPERATING INSTRUCTIONS

1. When using this lift, basic safety precautions should always be followed, including the following.
2. Read all instructions in this manual and on the lift.
3. Inspect lift daily. Do not operate if it malfunctions or problems have been encountered.
4. Never attempt to overload the lift. The manufacturer's rated capacity is shown on the identification label on the power side column. Do not override the operating controls or the warranty will be void.
5. Before driving vehicle between the towers, position the arms to the drive-through position to ensure unobstructed clearance. Do not hit or run over arms as this could damage the lift and/or vehicle.
6. Only trained and authorized personnel should operate the lift. Do not allow customers or bystanders to operate the lift or be in the lift area.
7. Position the lift support pads to contact the vehicle manufacturers recommended lifting points. Raise the lift until the pads contact the vehicle. Check pads for secure contact with the vehicle. Check all arm restraints and insure they are properly engaged. Raise the lift to the desired working height.
8. Some pickup trucks may require an optional truck adapter to clear running boards or other accessories.
   NOTE: Always use all 4 arms to raise and support vehicle.
9. **Caution! Never work under the lift unless the mechanical safety locks are engaged.**
10. Note that the removal or installation of some vehicle parts may cause a critical load shift in the center of gravity and may cause the vehicle to become unstable. Refer to the vehicle manufacturer's service manual for recommended procedures.
11. Always keep the lift area free of obstruction and debris. Grease and oil spills should always be cleaned up immediately.
12. Never raise vehicle with passengers inside.
13. Before lowering check area for any obstructions.
14. Before removing the vehicle from the lift area, position the arms to the drive-through position to prevent damage to the lift and /or vehicle.

2 SPECIFICATIONS

Capacity:	11000 lbs.	5000 kg
Overall Width:	146”	3708mm
Width Between Columns:	120"	3048mm
Drive-Thru Width:	109"	2769mm
Overall Height (12ft Model):	144"	3658mm
Overall Height (14ft Model):	168”	4267mm
Under Bar Clearance (12ft Model):	140"	3556mm
Under Bar Clearance (14ft Model):	164”	4166mm
Height to Lowered Lift Pads:	5 ¾”	146mm
Height to Raised Low Lift Pad:	7 ½”	190mm
Height to Raised High Lift Pad:	10 ½”	267mm
Retracted Arm Length:	35 ¼”	895mm
Extended Arm Length:	53 ½”	1359mm
Maximum Lifting Height:	79 ¼"	2013mm
Lift Time:	45 seconds	
Power Requirements (Standard):	230 Volts AC, 1 Ph., 60Hz.	

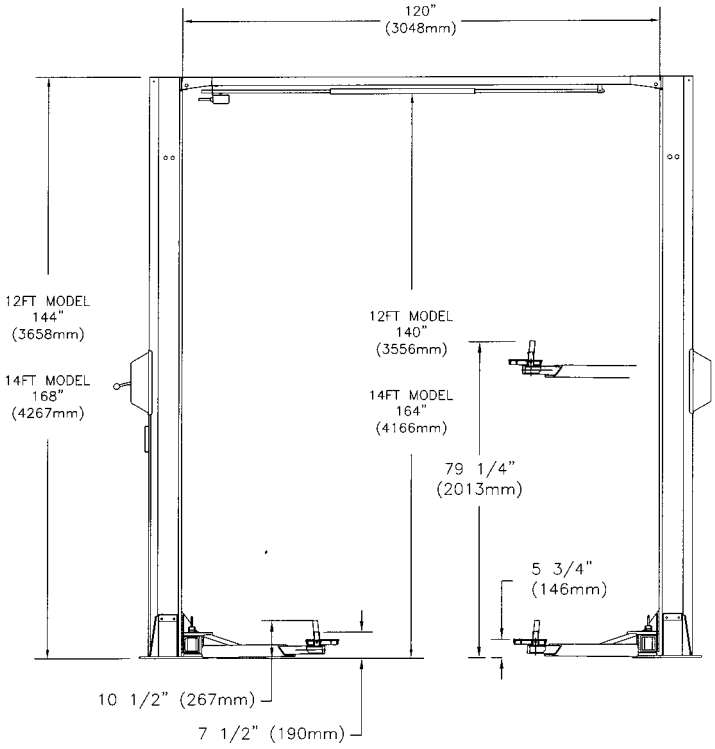

Figure 1 – Front View

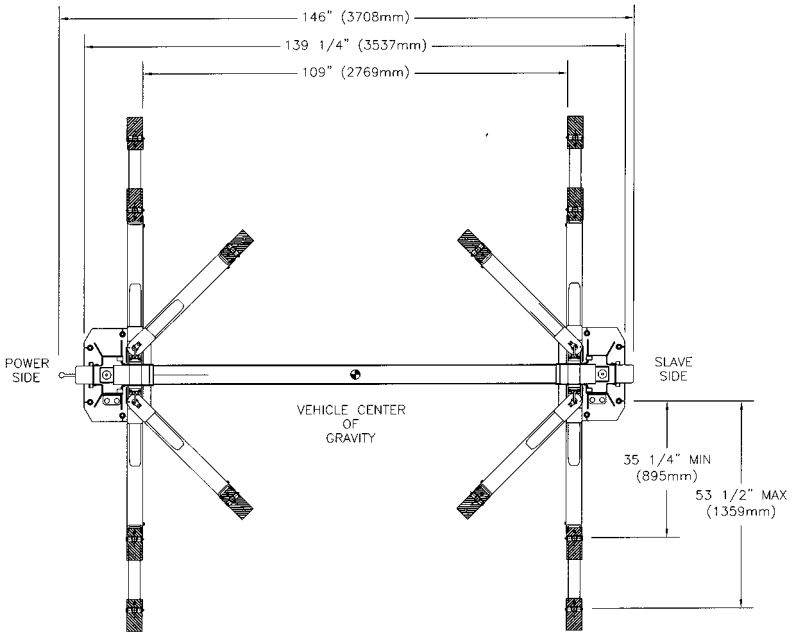

Figure 2 – Top View

3 CONTENTS

The complete lift is contained in two (2) packages:

1. The **main structural components** are packed in a steel frame.
2. The remaining parts are packed in an **accessory box**.

Main Structural Components includes:

1pc.	Power side tower and carriage assembly
1pc.	Slave side tower and carriage assembly
1pc.	Crossmember
1pc.	Hydraulic line for crossmember
1pc.	Actuator Bar w/ foam

Accessory box contents:

4pcs.	Locking Arm Ass'y w/arm pins
2pcs.	Safety Covers w/Decals
1pc.	Hardware Package w/Packing List
1pc.	Actuator Extension
1pc.	Actuator Mounting Bracket
1pc.	Power Pack
4pc.	Arm Restraint Assembly
1pc.	Safety Release Cable Assembly
1pc.	Hydraulic Tube Assembly
1pc.	Hydraulic Tube Ass'y (To Power Pack)
1pc.	Valve Block (C/W Fittings)
1pc.	Safety Shut-off Microswitch Assembly
1pc.	Owner's manual
1pc.	ALI manual "Lifting It Right"
1pc.	Automotive Lift Safety Tips
1pc.	Automotive Lift, Operation, Inspection and Maintenance manual
1pc.	"ALI" Quick Reference Guide

4 INSTALLATION REQUIREMENTS

IMPORTANT: <u>It is the user's responsibility to provide a satisfactory installation area for the lift. Lifts must only be installed on level concrete floors with a minimum thickness of five (5) inches or 130mm. Concrete must have a minimum strength of 4000 psi or 30 MPa and should be aged thirty (30) days prior to installation. Please consult the architect, contractor or engineer if doubt exists as to the strength and feasibility of the floor to enable proper lift installation and operation.</u>

It is the user's responsibility to provide all wiring for electrical hook-up prior to installation and to insure that the electrical installation conforms to local building codes. Where required, it is the user's responsibility to provide an electrical isolation switch located in close proximity to the lift that will enable emergency stop capability and isolate electrical power from the lift for any servicing requirements.

Tools Required:

1. 16ft. Measuring Tape
2. Chalk Line
3. Rotary Hammer Drill
4. diameter Masonry Drill Bit
5. Hammer
6. SAE Wrenches and Ratchet Set
7. 2ft. Level
8. 4ft. Level
9. Crow Bar
10. One 12ft. Step Ladder
11. Side Cutters
12. Screwdrivers
13. 15ft. Bleeder Hose (Clear) w/ 3/8"JIC Swivel F fitting on one end
14. 4"x4" Wooden Blocks (for unpackaging)

5 INSTALLATION INSTRUCTIONS

When the lift arrives on site, please read the owner's manual and check for any freight damages. Also, check the contents to make sure no parts are missing before starting installation. Gather all the tools listed and make sure the installation instructions are fully understood before commencing installation.

5.1 UNPACKING PROCEDURE

1. **Important!** Place the main structural components on wooden blocks so that the steel frames can be removed.

2. Remove plastic wrapping.

3. Remove crossmember, and hydraulic line.

4. Remove steel frames.

5. Lay towers on floor with the carriage side up.

6. Check the installation area for obstructions. (Lights, Heating Ducts, Ceiling, Floor Drains...etc.)

7. Prepare the bay by selecting the location of the lift relative to the walls. Clear area of all packaging materials to avoid trip hazards. Draw a chalk line on the floor to represent the center line of the bay and a second chalk line crossing at 90° for locating the lift towers. Refer to **Figure 3**.

5.2 BAY LAYOUT

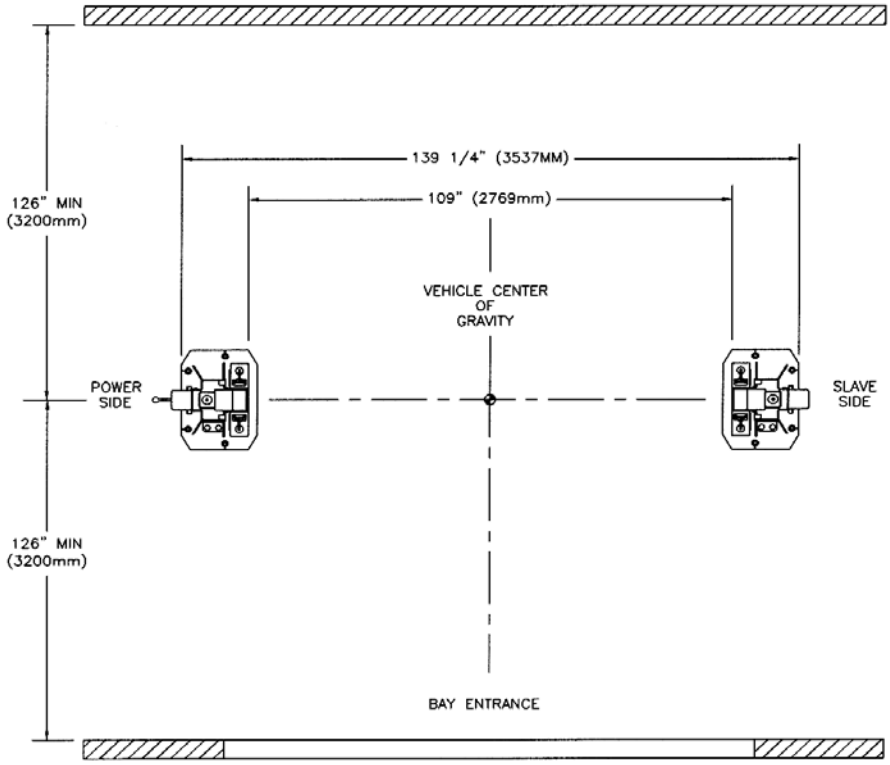

FIGURE 3 – BAY LAYOUT

5.3 SAFETY SHUT-OFF BAR INSTALLATION

Note: The safety shut off will disconnect the power to the power pack when an obstruction touches the padded bar or the carriages reach their maximum extension. The safety shut off switch is factory pre-wired. Refer to Figure 4.

Note: This procedure can be done on the floor.

1. Attach the actuator mounting bracket (1-1378) to the crossmember using hex head bolt 1/4" NC x 3/4" lg. bolt (6-0178), lockwasher 1/4" dia. (6-0056), and hex nut 1/4" NC (6-0032).

2. Attach the actuator bar assembly to the actuator mounting bracket assembly using hex head bolt 1/4" NC x 1 1/4" lg. (6-0027), lockwasher (6-0056), and hex nut 1/4" NC (6-0032).

3. Slide the safety shut-off microswitch assembly over open end of actuator bar and bolt the assembly to the crossmember using hex head bolt 1/4” NC x 3/4” lg. (6-0178), lockwasher (6-0056), and hex nut 1/4” NC (6-0032).

4. Bolt actuator extension (1-1379 12ft Model, 1-1823 14ft Model) onto open end of actuator bar using (2x) hex head bolt 1/4” -NC x 1 1/4” lg. (6-0027), lockwasher (6-0056), and hex nut 1/4” NC (6-0032).

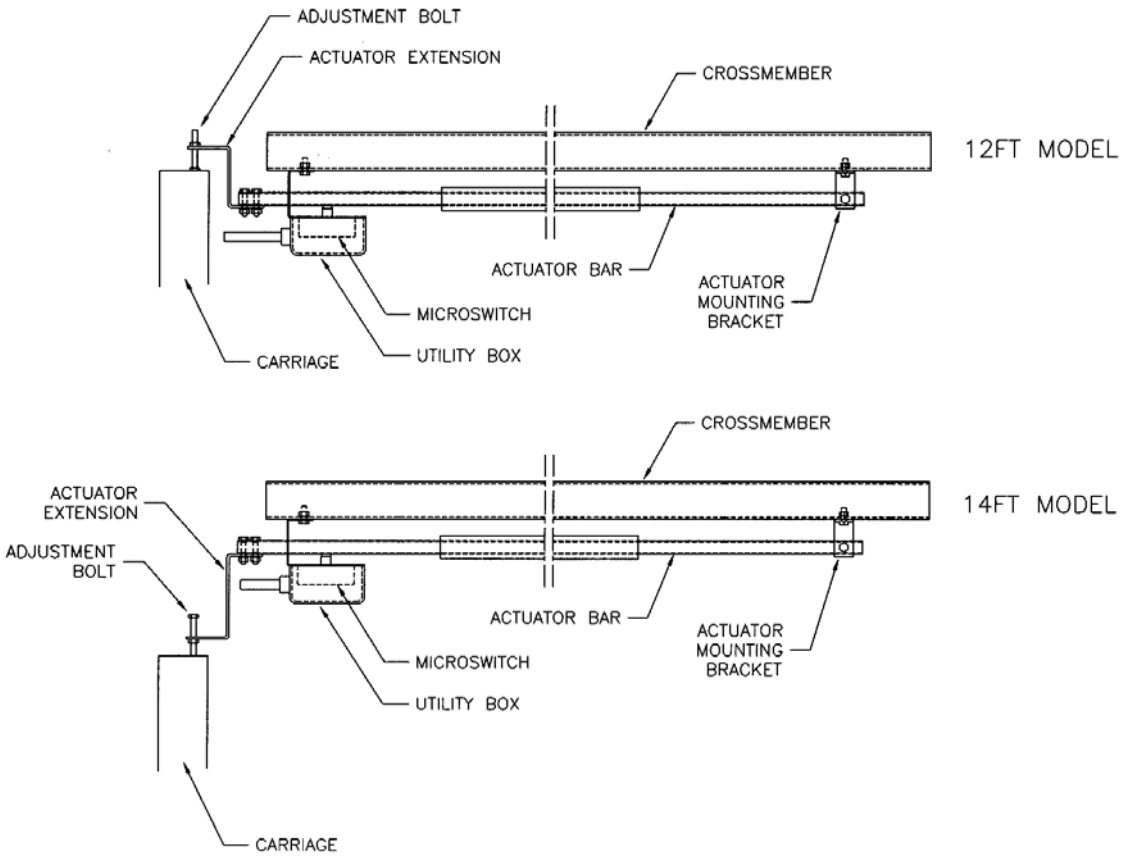

Figure 4 – Safety Shut-Off Bar Installation

5.4 SAFETY SHUT-OFF BAR ADJUSTMENT

Note: This procedure must be done last. Refer to Figure 4.

1. When the lift is fully installed, leveled. and operational, extend the carriages to their full upper limit.

2. Lower the carriages about 1/4” to 1/2”.

3. Bolt actuator extension (1-1379 12ft Model, 1-1823 14ft Model) onto open end of actuator bar using (2x) hex head bolt 1/4” -NC x 1 1/4” lg. (6-0027), lockwasher (6-0056), and hex nut 1/4” NC (6-0032).

4. Adjust the ¼” NC x 2” lg. Hex bolt so that the end of the bolt is in contact with the carriage. Tighten the ¼” NC hex nut on the bolt.

5.5 TOWER POSITIONING AND SETUP

1. Locate the power side and slave side tower to the relative position as shown in **Figure 3.** Double check all dimensions.

2. Using a step ladder, install the crossmember. Raise and place the crossmember mounting hooks over the top of the tower. Install and **tighten** the crossmember using eight (8) 1/2”-13UNC x 1¼”LG. hex head bolts, flat washers, lockwashers and hex nuts.

3. Check the towers to make sure they are located, and positioned in the correct location.

5.6 ARM INSTALLATION

1. Remove the four (4) 5/16”-18UNC x 3/4”LG. hex head bolts that are holding the arm pins to the arm. Install the arms on the carriages.

2. Grease and insert arm pins. Align the notch on each arm pin with the tapped hole on the arm, and using the 5/16”-18UNC x 3/4”LG. hex head bolt removed in previous step, reinstall and tighten securely.

3. Using two (2) 5/16”-18UNC x 1 ¼” LG. hex head bolts and two (2) 5/16” flatwashers, attach each arm restraint gear as shown in **Figure 5**.

FRONT

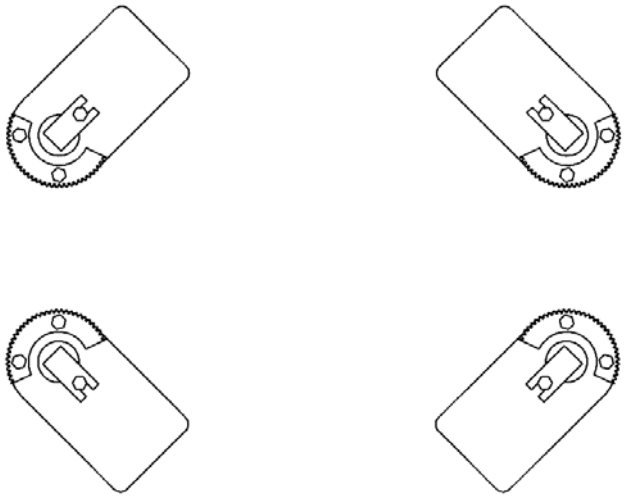

REAR

Figure 5 – Arm Installation

5.7 ARM RESTRAINT INSTALLATION

Using two (2) 3/8”-16UNC x 1” LG. socket head cap screws, and two (2) 3/8” ID lockwashers, install the arm restraint assemblies as shown in **Figure 6.** Before tightening completely, make sure that the arm restraint has full contact with the arm restraint gear by pushing it firmly against the arm.

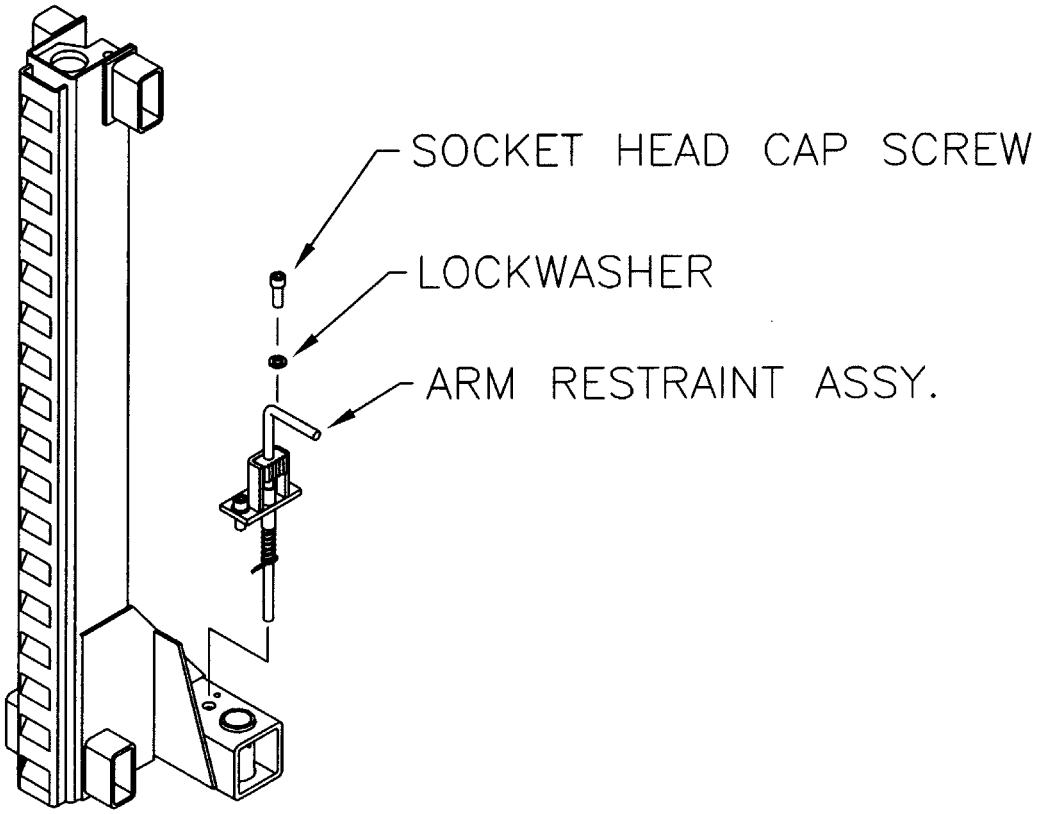

Figure 6 – Arm Restraint Installation

5.8 POWER PACK INSTALLATION

1. Remove the **red** plastic cap located at the rear of the power pack, and install the "T" fitting located in the hardware kit.

2. Bolt power pack to the mounting bracket on the power side tower using four (4) 5/16”-18UNC x 1”LG. hex head bolts, four (4) 5/16” ID lock washers, four (4) 5/16” ID flat washers and four (4) 5/16”-18UNC hex nuts. Do not tighten.

3. Remove the filler cap from the powerpack and fill the reservoir with approximately 4.5 Gal. (18L) of ISO32 hydraulic oil (10 wt. hydraulic oil). Remove breather screw when filling and replace when full. Refer to figure 7.

A **certified electrician** must connect the 230Volt/1Ph power to the motor. The electrical diagram is provided, refer to Error! Reference source not found.**7**.

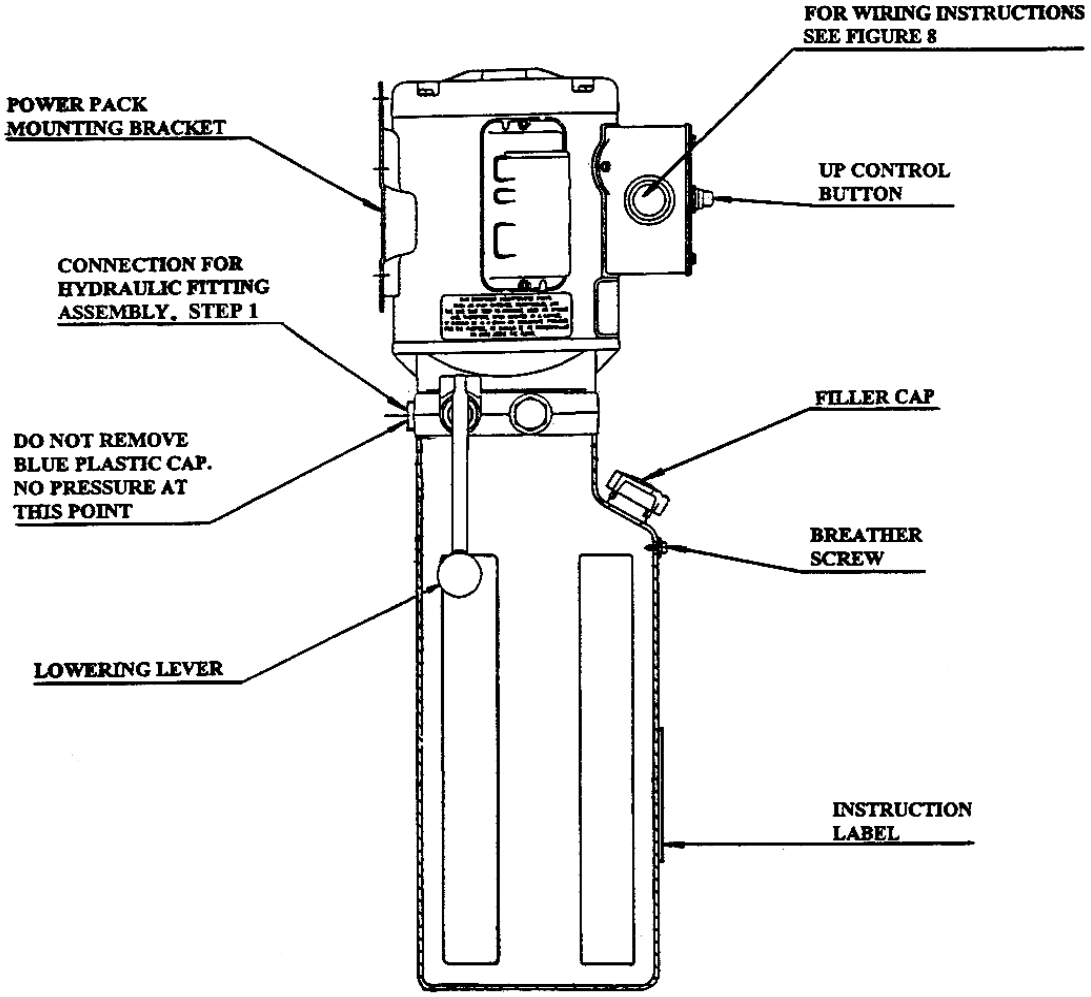

Figure 7 – Powerpack Details

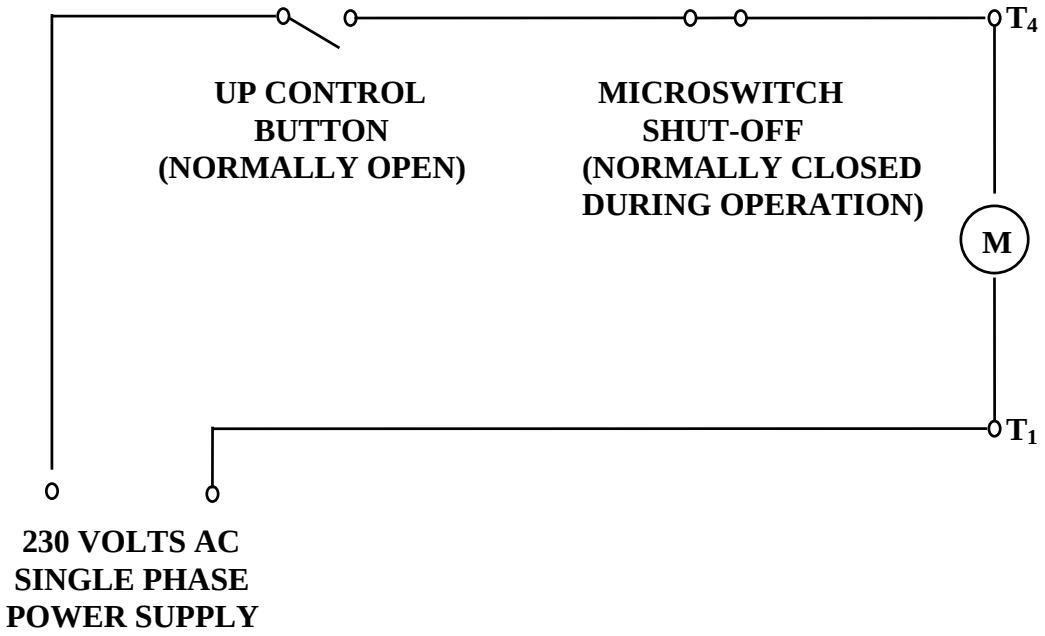

Figure 8 – Electrical Diagram

5.9 HYDRAULIC SYSTEM INSTALLATION

Refer to **Figure 9** and **10**, and the Hydraulic System Part List on page 27.
Note: Save hydraulic caps and plugs for future use.

1. Do not tighten any hydraulic fittings until all connections have been made.

2. Remove plug from item 17. Install item 17 (page 27) to the 90° fitting on the power pack (item 18).

3. Install the valve block to the power side tower using items 23 & 5.

4. On the power side cylinder, remove the cap off item 28 at the bottom rear and install item 27.

5. Attach item 27 to item 53 on the valve block.

6. At the bottom of the power side cylinder, remove the 1/4” cap from item 25 and attach it to item 51 on valve block.

7. Attach the other end of item 17 to the 90° fitting (item 18) on the valve block.

8. Remove the two caps on item 39 and place it in the crossmember. Connect the slave side end of this line to a bulkhead fitting (item 1) attached to the hydraulic line (item 6).

9. Connect the power side end to the bulkhead fitting (item 1) attached to the hydraulic line (item 30).

10. TIGHTEN ALL HYDRAULIC CONNECTIONS.
Caution: Over tightening could cause the flare seal to break.

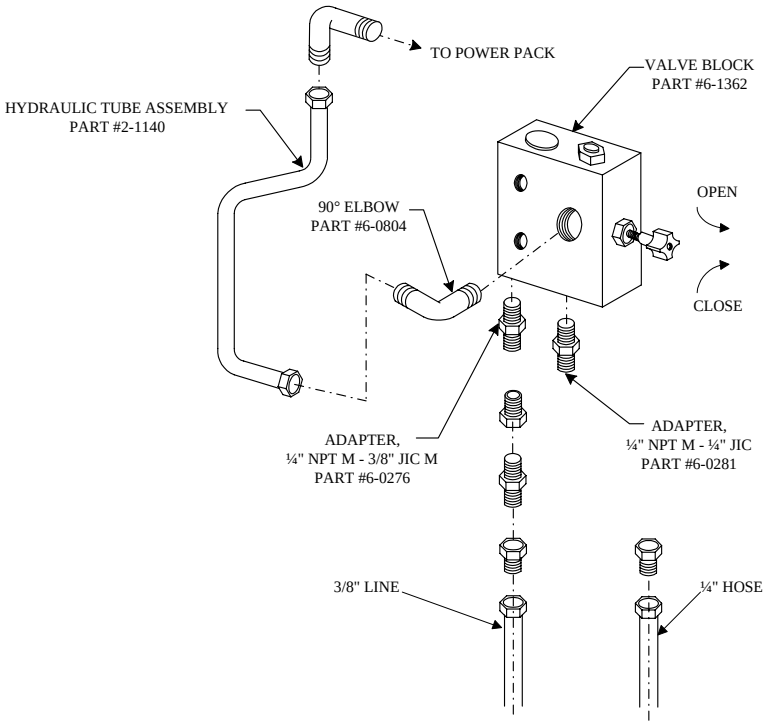

Figure 9 – Hydraulic System Connections

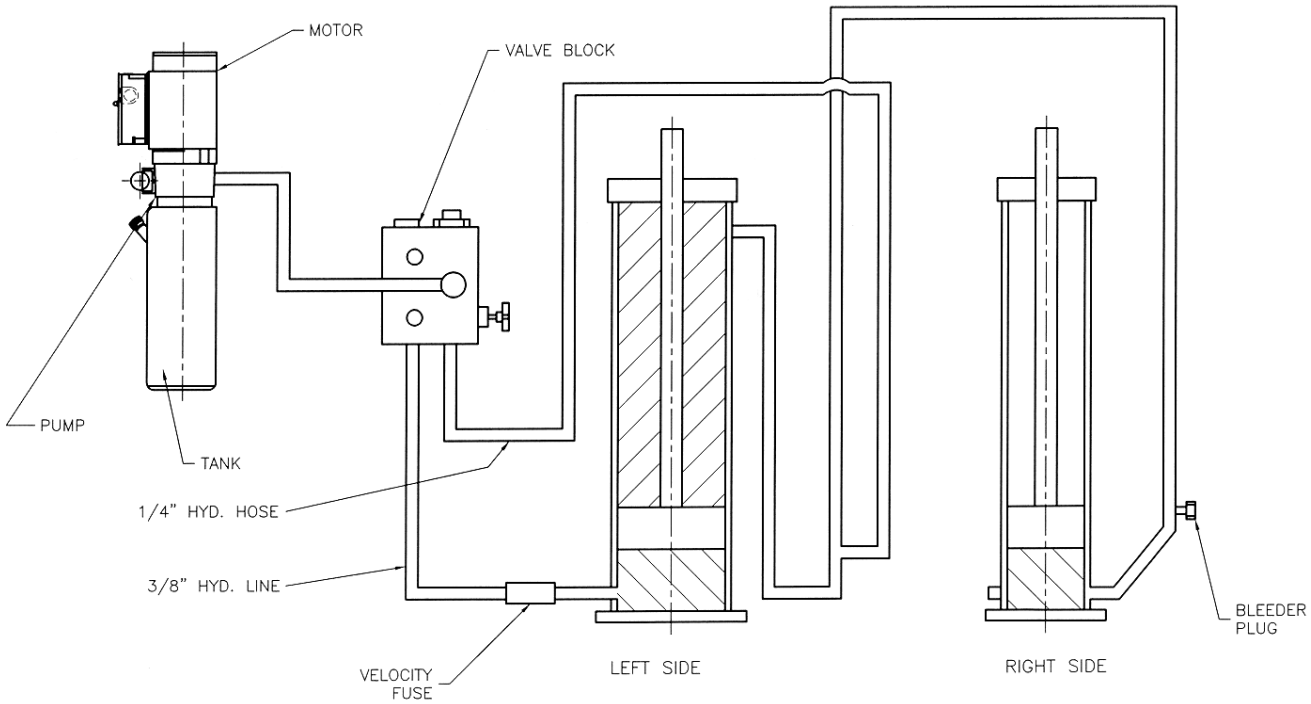

Figure 10 – Hydraulic System Schematic

5.10 SAFETY RELEASE CABLE ROUTING AND ADJUSTMENT

The mechanical safety automatically engages. To release the mechanical safety, you must first raise the lift approximately 2", then pull the safety release lever down. This disengages the power side safety dog and activates the safety cable to release the slave side safety dog.

1. Install the safety pulley on each tower as shown in **Figure 11**. Attach the safety pulley to the tower using the 3/8" x 5/8" LG. shoulder bolt, 5/16" lockwasher and 5/16" hex nut.

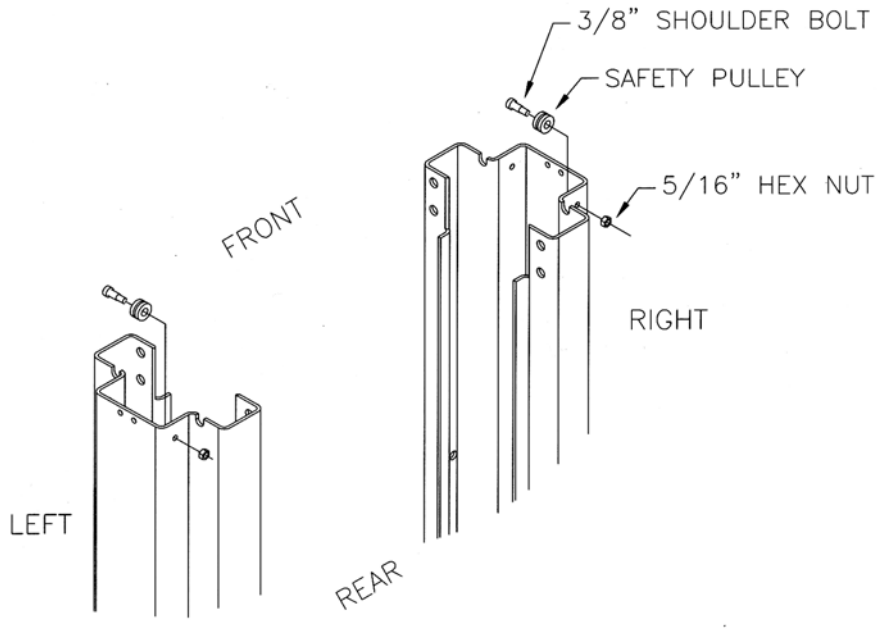

Figure 11 - Safety Release Pulley Installation

2. Refer to **Figure 12** for safety release cable routing. The end of the cable that has a collar attaches to the slave side safety dog. The free end is fixed to the power side safety dog using two (2) wire rope clips.

3. Install the safety release handle onto the power side safety dog.

4. Start routing the safety release cable from the slave side of crossmember. Feed the cable over the small pulley, then guide the cable down along the inside of the slave side tower. Pull the cable out through the opening in the back of the tower near the safety dog.

5. Guide the cable up <u>under</u> the large pulley towards the end of the safety dog. Remove the 3/8" x 1 ½" shoulder bolt from the safety dog. Feed the shoulder bolt through the collar of the safety release cable and then replace the shoulder bolt securely to the safety dog. **<u>NOTE:</u>** Make sure shoulder bolt, 3/8" dia. x 1 ½" lg. (6-0801), is lock tight to safety dog.

6. Repeat step 2 for the power side tower.

7. Guide the cable up <u>under</u> the large pulley and then over the small pulley towards the safety dog. Wrap the cable around the thimble (attached to the safety dog with a 3/8” x 1/2” lg. shoulder bolt) and then clamp it using two (2) wire rope clips. Do not tighten fully at this stage.

8. Adjust the cable length so that both safety dogs travel from full engagement position to full release position when the safety release handle is pulled. **Tighten both wire rope clips firmly when adjustment is completed.**

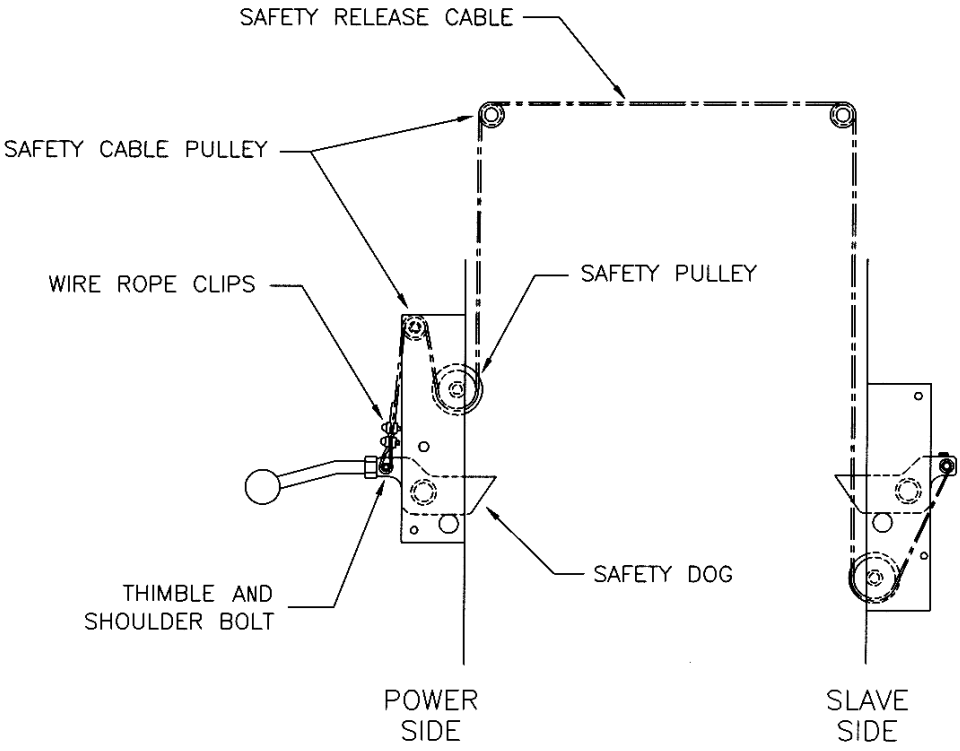

Figure 12 – Safety Release Cable Routing and Adjustment

5.11 HYDRAULIC SYSTEM BLEEDING AND LEVELING PROCEDURE

1. Ensure that both carriages are fully lowered.

2. Remove the bleeder cap from the “T” fitting at the bottom of the slave side cylinder.

3. Attach a 15ft. clear bleeding hose to the same fitting, and place the open end of the hose into the power pack’s reservoir’s filler neck or in a container in which the oil came in for reuse. Hose should be secured during the bleeding procedure.

4. Close the by-pass valve, and power up until the power side carriage reaches the carriage stops.

5. Open the by-pass valve, and power up until oil is seen flowing out of the bleeder hose. (No Air Bubbles). Bleed at least 1 gal. of hydraulic fluid through the system.

6. Remove the bleeding hose and reinstall the bleeder cap. Replace breather/filler cap.

7. Power up until slave side carriage reaches the carriage stops.

8. Close the by-pass valve and lower lift (both sides) until both carriages are fully collapsed. Power up and lower (14") lift a few times. When lift is fully down, open the by-pass valve and raise the slave side 2-3" higher than the power side. Close the by-pass valve.

9. Power up, and lower lift onto the first safety, on the power side. Open the by-pass valve and lower slave side onto the same first safety. Close the by-pass valve. Lift is now synchronized hydraulically.

10. Both power and slave sides must be completely down.

11. Check and add hydraulic fluid to power pack before cycling lift.

12. Install safety covers, and safety release lever knob. Securely.

13. After anchoring, set up a vehicle on the lift to make sure hydraulics are operating properly.

5.12 HYDRAULIC ADJUSTMENT PROCEDURE

Important! Should your lift come out of synchronization, i.e. one carriage is higher than the other, it is necessary to level the lift hydraulically.

When **slave** side is **higher** than the power side:

1. Lower lift on to the first safety on the power side.

2. Open by-pass valve. Push the down control lever. This will cause the slave side carriage to be lowered. Stop lowering when the slave side carriage stops on the first safety.

When **power** side is **higher** than the slave side:

1. Open the by-pass valve, raise lift until the slave side carriage is approximately 1-2" higher than the power side carriage. Stop raising and close by-pass valve.

2. Lower lift by pushing the down control lever. Stop lowering when the power side carriage touches the first safety.

3. Next, open the by-pass valve. Push the down control lever so that the slave side carriage lowers. Stop lowering when the slave side carriage touches the first safety. Close the by-pass valve.

5.13 TOWER POSITIONING AND ANCHORING

WARNING! **Failure to follow these instructions may cause an unsafe operating condition**.

WARNING! **Before proceeding with installation, review Section 4: Installation Requirements & Tools.**

1. Using a 4ft. level on top of the crossmember, determine which column is higher **(Figure 13).**

2. Using 2 ft. level on the sides of the high column, ensure that the column is level in the vertical position **(Figure 14)**. Use shims under the column baseplate to hold the column level. Ensure that the base plate is completely supported by shims where it does not contact the floor **(Figure 15)**.

WARNING! **Do not use more than ½" (13mm) of shims. Anchor bolts supplied allow for a maximum of ½" (13mm) of shim. If more than ½" (13mm) of shims are required, DO NOT proceed with installation and contact Product Manufacturer / Supplier for further details.**

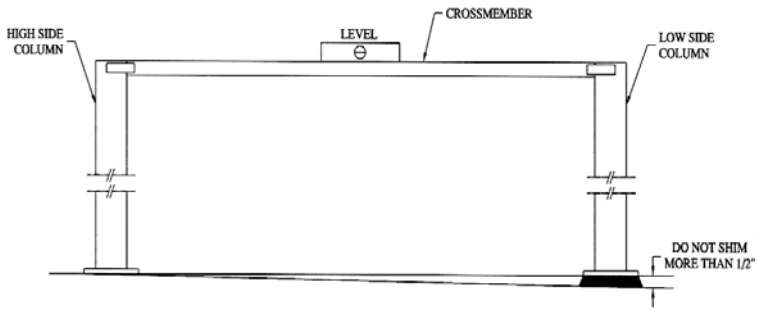

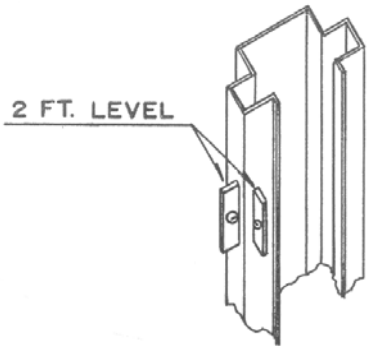

Figure 13 – Crossmember Leveling **Figure 14 – Tower Leveling**

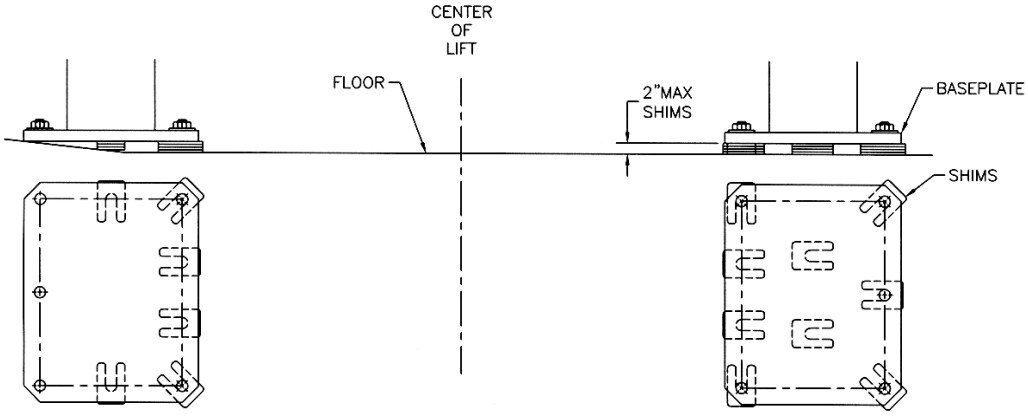

Figure 15 – Shim Placement

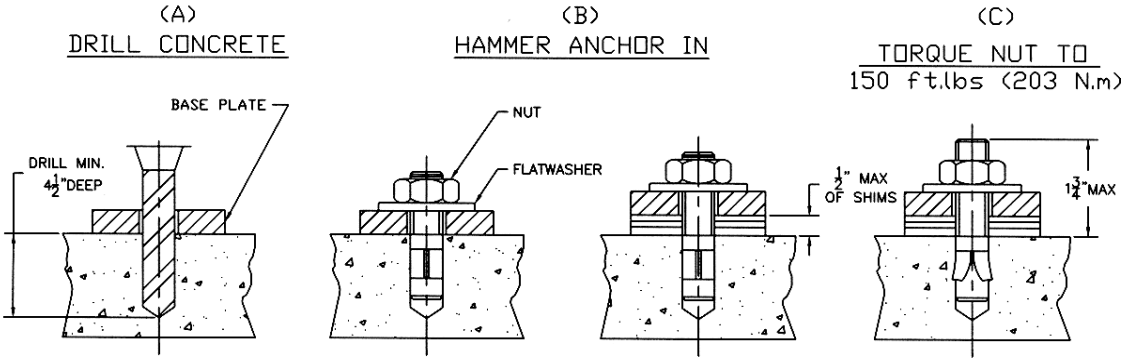

Figure 16 – Anchor Installation

3. Refer to Bay Layout **(Figure 3)** to ensure that the column is still in the proper position. Using a rotary hammer drill with a ¾" masonry drill bit, drill holes in the floor on the high side column using the tower baseplate as a template. Make sure that the ¾" masonry drill is in good condition **(Figure 16A)**.

4. Carefully clean out drilling dust from the anchor holes. Hammer in the anchor bolts **(Figure 16B)**. Hand tighten all anchor bolts.

5. Reconfirm that the column is level front to rear and side to side **(Figure 14)**. Add or remove shims as required.

6. Torque all anchor bolts to 150 ft-lbs. (203 Nm), continually checking that the column is level as you proceed. If anchor bolts do not tighten to 150 ft-lbs. OR project more than 1 ¾" above the concrete surface **(Figure 16C)**, the concrete MUST be replaced by an appropriate concrete pad. (Consult Product Manufacturer / Supplier for further details).

5.14 SHIMMING OF THE REMAINING TOWER

1. Using a 4ft. level on the crossmember **(Figure 14)** and a 2ft. level on the low side column **(Figure 15)**, shim underneath the baseplate until the crossmember and column are level. Ensure that the baseplate is completely supported by shims where it does not contact the floor **(Figure 16)**.

WARNING! Do not use more than ½" (13mm) of shims. Anchor bolts supplied allow for a maximum of ½" (13mm) of shim. If more than ½" (13mm) of shims are required, DO NOT proceed with installation. Contact Product Manufacturer / Supplier for further details.

2. Refer to Bay Layout **(Figure 3)** to ensure that the column is still in the proper position. Using a rotary hammer drill with a 3/4" masonry drill bit, drill holes in the floor on the low side column using the column baseplate as a template. Make sure that the 3/4" masonry drill is in good condition **(Figure 16A)**.

3. Carefully clean out drilling dust from the anchor holes. Hammer in the anchor bolts **(Figure 16B)**. Hand tighten all anchor bolts.

4. Reconfirm that the crossmember is level **(Figure 13)** and that the column is level front to rear and side to side **(Figure 14)**. Add or remove shims as required.

5. Torque all anchor bolts to 150 ft-lbs. (203 Nm), continually checking that the crossmember and column are level as you proceed. If anchor bolts do not tighten to 150 ft-lbs. OR project more than 1 ¾" above the concrete surface **(Figure 16C)**, the concrete MUST be replaced by an appropriate concrete pad. (Consult Product Manufacturer / Supplier for further details).

6. Verify that the entire lift is level both horizontally and vertically, to ensure optimum lifting performance.

***Perform a monthly inspection and torque all anchor bolts to 150 ft-lbs. (203 Nm).**

6 LIFT MAINTENANCE GUIDLINES

6.1 SAFETY INSTRUCTIONS

Read operating and safety manuals before using any lift
Do not operate a lift that has been damaged or is in disrepair
Proper inspection and maintenance is necessary for safe operation

6.2 PERIODIC MAINTENANCE

DAILY:

1. Check all hydraulic lines and fittings for pinch points, damage, cracks or leaks
2. Check all electrical wiring for pinch points, cracks or damage
3. Check all moving parts for uneven or excessive wear
4. Repair or replace all damaged, defective, worn or broken components immediately
5. Check the telescopic arms for movement. Clean any grease or oil from the lifting adapters
6. Raise and lower the lift at the beginning of each shift, without a vehicle on, to verify the lift is leveled and operating properly. Perform hydraulic leveling procedure when the lift is out of level.

WEEKLY:

1. Check and adjust hydraulic level

EVERY TWO MONTHS:

1. Clean and re-grease slide block channels inside of both columns
2. Grease arm pins
3. Check and lubricate safety dogs and safety cable adjustment
4. Check arm restraints and lubricate
5. Dismantle and clean inner arms
6. Check anchor bolts and re-torque if required
7. Check bolts on the carriage stops for tightness. Note: The carriage stop on the slave side tower should have the thicker side facing downwards, and on the power side facing upwards. Refer to **Figure 17**.

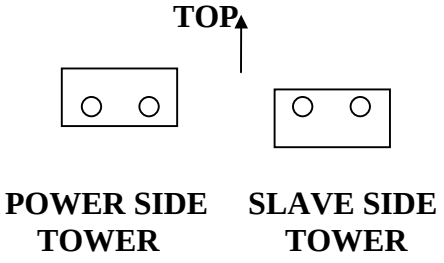

Figure 17 – Carriage Stops

EVERY YEAR:

1. Inspect lift as per Automotive Lift Operation, Inspection and Maintenance (ALOIM)

EVERY TWO YEARS:

1. Change hydraulic fluid

LUBRICATION:

Where grease is required	>	multi-purpose lithium grease
Where lubricating oil is required	>	multi-purpose SAE 30 lubricating oil
Where hydraulic oil is required	>	ISO 32 10W - non detergent hydraulic oil

NOTE: If lift locks while in the fully raised position this will indicate that the hydraulic system has not been inspected or maintained as recommended. This is a safety back-up system. If you are unclear call your local representative immediately.

7 SAFETY AWARENESS - AUTOMOTIVE LIFT INSTITUTE (ALI)

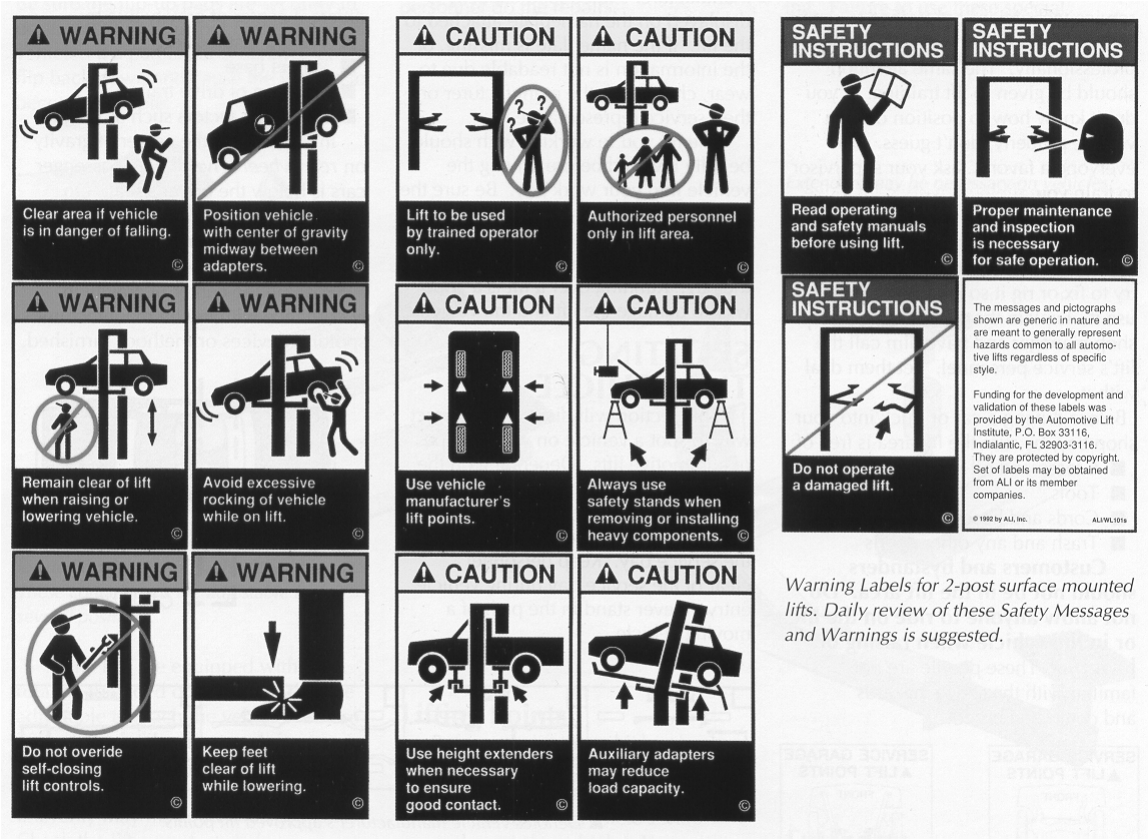

Warning Labels for 2-post surface mounted lifts. Daily review of these Safety Messages and Warnings is suggested.

8 PARTS MANUAL

8.1 LIFT ASSEMBLY

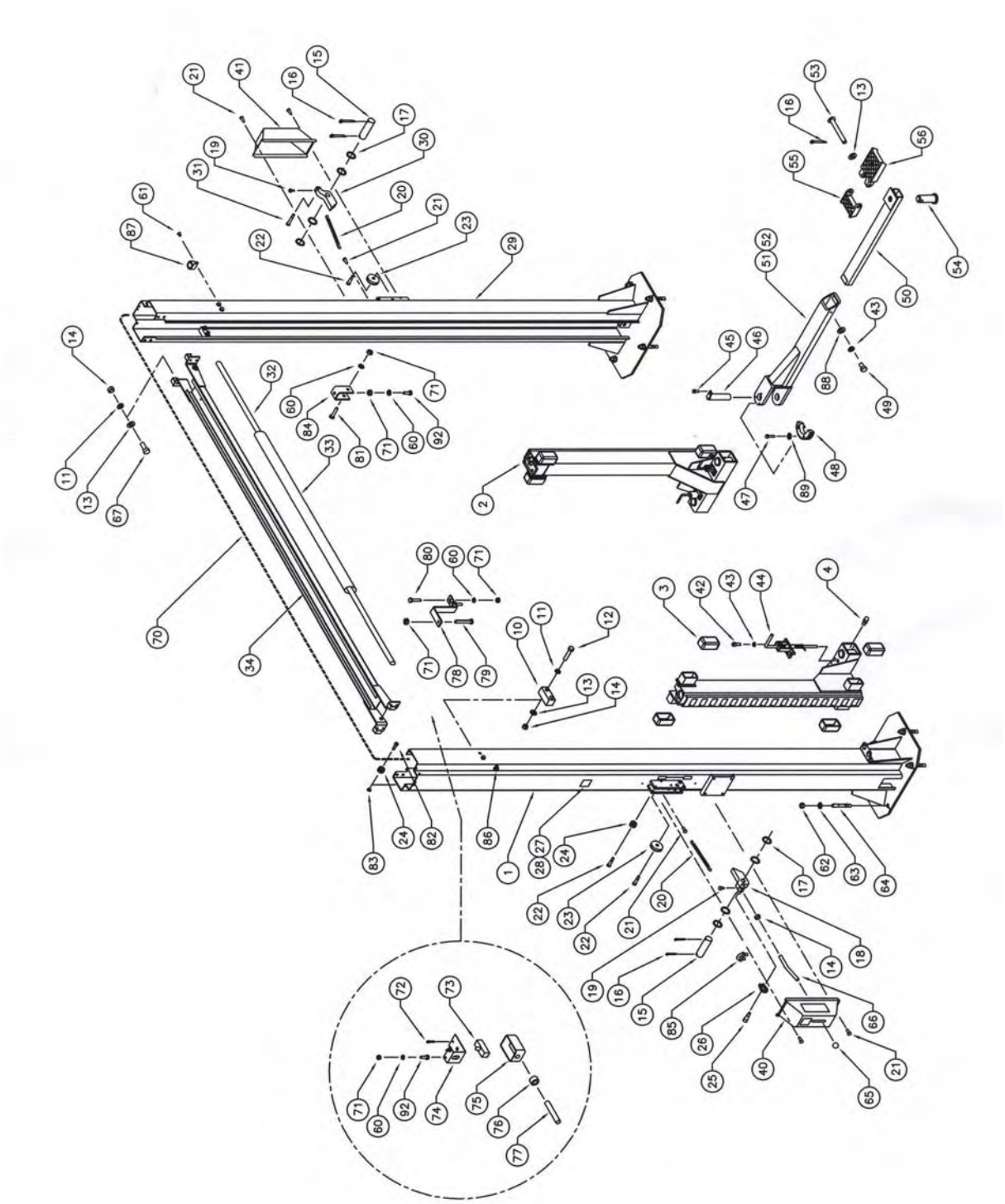

8.2 LIFT ASSEMBLY PARTS LIST

ITEM	QTY	DESCRIPTION	PART #
1	1	TOWER WELDMENT, POWER SIDE – 12FT MODEL	4-1032
	1	TOWER WELDMENT, POWER SIDE – 14FT MODEL	4-1034
2	2	CARRIAGE WELDMENT	4-1031
3	8	GLIDE BEARING	2-0772
4	4	GREASE NIPPLE	6-0000
10	4	CARRIAGE STOP BLOCK	1-0877
11	16	LOCKWASHER, 1/2”ID	6-0059
12	8	HEX HD BOLT ½” – NC X 2 ¼”	6-0315
13	20	FLAT WASHER, 1/2”ID SAE	6-0248
14	21	HEX NUT, 1/2”-13UNC	6-0035
15	2	SAFETY PIN	1-0938
16	8	COTTER PIN, 1/8”DIA. x 1”LG.	6-0267
17	8	FLAT WASHER, 51/64”ID x 1”OD x 1/16”THK.	6-0808
18	1	SAFETY DOG WELDMENT, POWER SIDE	2-1901
19	4	SELF TAPPING SCREW, #10 X 3/8” LG.	6-0169
20	2	SAFETY SPRING	1-1115
21	6	SELF TAPPING SCREW, #12 x 1/2”LG.	6-1134
22	3	SHOULDER BOLT, 3/8”DIA. x 1”LG.	6-0206
23	2	SAFETY PULLEY	1-0415
24	3	SAFETY CABLE PULLEY	1-1116
25	1	SHOULDER BOLT, 3/8” x 1 1/2” LG.	6-0801
26	1	THIMBLE, 5/32”	6-2074
27	1	CAPACITY DECAL	6-1767
28	1	SERIAL PLATE	6-1111
29	1	TOWER WELDMENT, SLAVE SIDE – 12FT MODEL	4-1033
	1	TOWER WELDMENT, SLAVE SIDE – 14FT MODEL	4-1035
30	1	SAFETY DOG, SLAVE SIDE	2-0872
31	1	SHOULDER BOLT, 3/8”DIA. x 1 1/2”LG.	6-0801
32	1	ACTUATOR BAR	1-1439
33	1	FOAM GUARD	6-1404
34	1	CROSSMEMBER WELDMENT	2-1281
40	1	SAFETY COVER cw/DECALS, POWER SIDE	0-0204
41	1	SAFETY COVER cw/DECALS, SLAVE SIDE	0-0203
42	8	SOCKET HEAD CAP SCREW, 3/8” X 1” LG.	6-2048
43	12	LOCKWASHER, 3/8” ID	6-0058
44	4	ARM RESTRAINT ASSEMBLY	1-2038
45	4	HEX BOLT, 5/16”-18UNC x 3/4” LG.	6-0423
46	4	ARM PIN	2-1594
47	4	HEX BOLT, 5/16”-18UNC x 1 1/4” LG.	6-2059
48	4	ARM RESTRAINT GEAR	1-2618
49	4	HEX BOLT, 3/8UNCx3/4”LG.	6-0030
50	4	INNER ARM WELDMENT	2-1273
51	2	OUTER ARM WELDMENT, F.L./R.R.	3-0868
52	2	LOCKING ARM ASS’Y, F.L., R.R (C/W PIN & PAD)	4-1036-6
53	4	CENTER PIN	1-1099
54	4	ADAPTER PIN	1-1091
55	4	LOW POSITION ADAPTER	3-0583
56	4	HIGH POSITION ADAPTER	3-0582

ITEM	QTY	DESCRIPTION	PART #
60	6	LOCKWASHER, 1/4” ID	6-0056
61	6	ROUND HEAD SCREW, 1/4”-20UNC x 3/8” LG.	6-1353
62	10	HEX NUT, 3/4”-10UNC	6-0737
63	10	FLAT WASHER, 3/4”ID	6-0738
64	10	WEDGE ANCHOR, 3/4”-10UNC x 5 1/2”LG.	6-1379
65	1	PLASTIC KNOB	6-1135
66	1	SAFETY RELEASE HANDLE	1-1113
67	8	HEX BOLT, 1/2”-13UNC x 1 1/4” LG.	6-0046
70	1	SAFETY RELEASE CABLE	1-2058
71	7	HEX HD. NUT 1/4”NC	6-0032
72	2	6/32 SCREW (ELECTRICAL BOX)	6-1466
73	1	MICROSWITCH	6-0916
74	1	LIMIT SWITCH MTG. BRACKET	2-1143
75	1	ELECTRICAL UTILITY BOX	6-1403
76	1	CABLE CONNECTOR	6-1133
77	1	ELEC. CABLE 12/3 x 117”LG. – 12FT MODEL	6-1173
	1	ELEC. CABLE 12/3 x 141”LG. – 14FT MODEL	6-1513
78	1	ACTUATOR EXTENSION – 12FT MODEL	1-1379
	1	ACTUATOR EXTENSION – 14 FT MODEL	1-1823
79	1	HEX HD. BOLT 1/4”NC x 2”LG.	6-0741
80	2	HEX HD. BOLT 1/4”NC x 1 1/4”LG.	6-0027
81	1	HEX HD. BOLT 1/4”NC x 1 ½”LG.	6-0205
82	2	SHOULDER BOLT, 3/8”DIA. x 5/8”LG.	6-0069
83	2	HEX NUT, 5/16”-18UNC	6-0294
84	1	ACTUATOR MTG. BRACKET	1-1378
85	2	WIRE ROPE CLIP, 1/16”	6-2060
86	3	ELECTRICAL CABLE CLIP, 5/8” ID	6-1759
87	6	TUBE CLAMP, 1/2”	6-0536
88	4	FLATWASHER, 3/8”ID SAE	6-0062
89	8	FLATWASHER, 5/16”ID	6-0295
90	2	OUTER ARM WELDMENT, F.R./R.L.	3-0869
91	2	LOCKING ARM ASS’Y, F.R., R.L. (C/W PIN & PAD)	4-1037-6
92	3	HEX BOLT, ¼” – 20 UNC X ¾” LG.	6-0178

8.3 HYDRAULIC SYSTEM

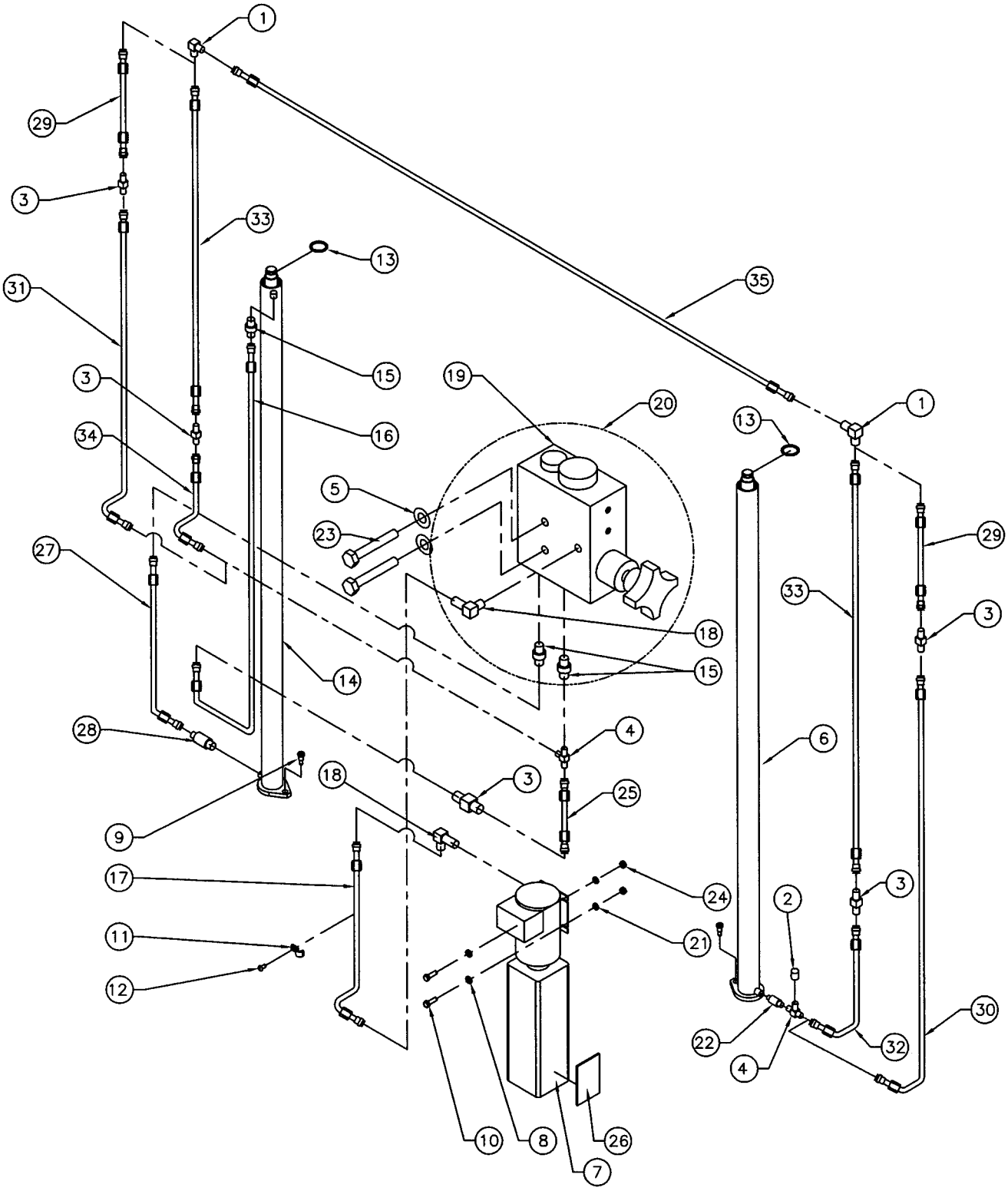

8.4 HYDRAULIC SYSTEM PARTS LIST

ITEM	QTY.	DESCRIPTION	PART #
1	2	ELBOW BULKHEAD 90°, 3/8”JIC-3/8”JIC	6-0012
2	1	CAP, 3/8”JIC	6-0021
3	3	UNION, 3/8”JIC MALE	6-0286
4	2	TEE, 3/8” SWIVEL NUT JIC MALE	6-0284
5	2	LOCKWASHER, 1/4” I.D.	6-0056
6	1	HYDRAULIC CYLINDER ASS’Y, RS	3-0735
7	1	POWER PACK (8K)	6-1956
	1	POWER PACK (9K)	6-1957
	1	POWER PACK (11K)	6-1935
8	4	FLAT WASHER, 5/16”ID	6-0295
9	2	SHOULDER BOLT, 1/2” x 5/8”LG.	6-0425
10	4	HEX BOLT, 5/16”-18UNC x 1”LG.	6-0293
11	7	TUBE CLAMP	6-0170
12	7	ROUND HD. BOLT, 1/4”-20UNC x 3/8”LG.	6-1353
13	2	CIRCLIP	6-0340
14	1	HYDRAULIC CYLINDER ASS’Y, LS	4-0289
15	2	ADAPTER, 1/4”NPT MALE - 3/8”JIC MALE	6-0276
16	1	HYDRAULIC TUBE ASS’Y, LS	2-0887
17	1	HYDRAULIC TUBE ASS’Y (VALVE BLOCK TO POWERPACK)	2-1140
18	2	ELBOW 90°, 9/16”SAE M-3/8”JIC M	6-0804
19	1	HYDRAULIC VALVE BLOCK	6-1362
20	1	HYDRAULIC VALVE BLOCK ASS’Y (C/W FITTINGS)	6-2623
21	4	LOCKWASHER, 5/16”ID	6-0674
22	1	ADAPTER, 3/8”NPT - 3/8”JIC x 2 1/4”LG.	6-0345
23	2	HEX HD. BOLT, 1/4”-20UNC x 1 3/4”LG.	6-0028
24	4	HEX NUT, 5/16”-18UNC	6-0294
25	1	HYDRAULIC TUBE ASS’Y	1-2436
26	1	“LIFT OPERATION" DECAL	6-2094
27	1	HYDRAULIC TUBE ASS’Y	2-0886
28	1	VELOCITY FUSE, 4GPM	6-0422
29	1	HYDRAULIC TUBE ASS’Y (2-PIECE TOWER)	2-0878
30	1	HYDRAULIC TUBE ASS’Y, RS (2-PIECE TOWER)	2-1876
31	1	HYDRAULIC TUBE ASS’Y, LS (2-PIECE TOWER)	2-1877
32	1	HYDRAULIC TUBE ASS’Y, RS (12’ & 14’ TOWER)	2-1874
33	1	HYDRAULIC TUBE ASS’Y, (12’ TOWER)	2-1873
	1	HYDRAULIC TUBE ASS’Y, (14’ TOWER)	2-1875
34	1	HYDRAULIC TUBE ASS’Y, LS	2-1872
35	1	HYDRAULIC TUBE ASS’Y (11K SYM)	2-1964
		GLAND SEAL KIT, RIGHT SIDE (8/9/11K)	0-0551
		PISTON SEAL KIT, RIGHT SIDE (8/9/11K)	0-0159
		GLAND SEAL KIT, LEFT SIDE (8/9/11K)	0-0206
		PISTON SEAL KIT, LEFT SIDE (8/9/11K)	0-0160

8.5 POWER PACK: #6-1935 (AB-1399) 208-230V/1PH/60Hz

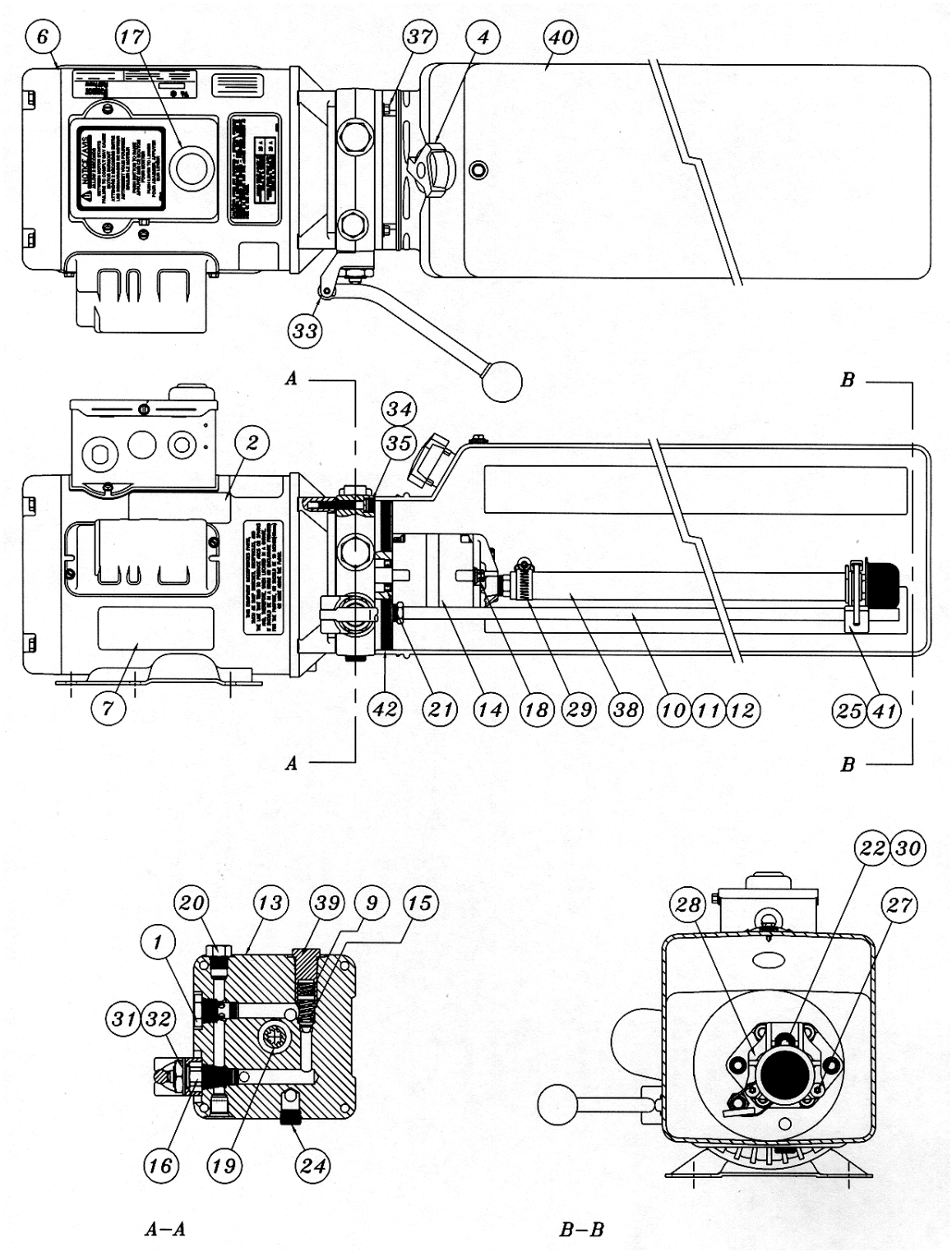

8.6 POWER PACK PARTS LIST: #6-1935 (AB-1399) 208-230V/1PH/60Hz

ITEM	QTY.	DESCRIPTION	PART #
1	1	VALVE CARTRIDGE CHECK	6-1087
2	1	LABEL INSTALLATION AUTOHOIST	6-2136
4	1	BREATHER CAP & BLADDER	6-1376
6	1	MOTOR AC 208-230V. 2HP/1PH/60Hz, BLK	6-2474
7	1	LABEL WARNING AUTOHOIST	6-2149
9	1	SPRING 0.480” x 0.063” x 0.42” COMP	6-2151
10	1	RETURN HOSE 3/8” OD x 21.5”	6-2152
11	1	COMPRESSION TUBE NUT	6-2153
12	1	COMPRESSION TUBE SLEEVE	6-2154
13	1	ENDHEAD UNIVERSAL AUTOHOIST	6-2155
14	1	PUMPASSY 2.0 CC/REV. SHORT SPLINE	6-0782
15	1	RELIEF ASSEMBLY FIXED 240 BAR	6-1324
16	1	VALVE CARTRIDGE RELEASE MANUAL	6-0880
17	1	WIRING ASSEMBLY AC 1PH FENNER	6-2473
18	2	BOLT 5/16”-24 x 3.00” TORX G8	6-1090
19	1	COUPLING SAE 9T-20/40 1.260”	6-0774
20	1	PLUMBING PLUG 9/16” SAE	6-2157
21	1	SEAL SHAFT 0.500” x 1.00” x 0.25”	6-2158
22	1	WASHER 0.338” x 0.625” x 0.060” STEEL	6-2159
24	1	PLUMBING PLUG 3/8” NPT	6-2161
25	1	PLUMBING MAGNET	6-2162
27	2	SCREW TAPTITE M6 x 1.0 12MM TORX	6-2164
28	1	COVER ASSY SUCTION	6-2165
29	1	PLUMBING CLAMP HOSE ADJ. INLET	6-2166
30	1	BOLT 5/16”-18 x 1.00” SHCS	6-1392
31	1	NUT ¾”-16 x 1” HEX x 0.250” STEEL	6-2167
32	1	WASHER ¾” INT. TOOTH LOCK	6-2168
33	1	BRACKET – HANDLE ASSY REL BLACK	6-0776
34	4	BOLT M6 x 1.0 35MM SOC HD	6-2169
35	4	WASHER ¼” LOCK HI-COLLAR	6-2170
37	4	BOLT #12-24 x 0.50’ HEX WSHRHD	6-1091
38	1	PLUMBING ASSY INLET 17.24 (3)	6-0786
39	1	RELIEF VALVE CAP ASSEMBLY	6-1089
40	1	TANK PLASTIC 6.7 OS 22.50” BLK	6-1399
41	1	CABLE TIE 8” LONG WHITE	6-1846
42	1	O-RING 2-348 BUNA	6-0875